THIS COPY IS PROVIDED ON A RESTRICTED BASIS AND IS NOT TO BE USED IN ANY WAY DETRIMENTAL TO THE INTERESTS OF PANDUIT CORP.

NOTES:
1. DIMENSIONS IN BRACKETS [ ] ARE METRIC [mm]
2. PRODUCT DESIGNED TO LOCK INTO PANDUIT PART: QB-MOUNT.
3. PRODUCT DESIGNED TO SUPPORT A MAX STATIC LOAD OF 5 LBS.
4. PRODUCT IS RATED FOR ENVIRONMENTAL CONDITIONS OF 40-100°F IN ALL HUMIDITY CONDITIONS.
5. REFER TO PANDUIT CATALOG FOR LIST OF COMPATIBLE ACCESSORIES.

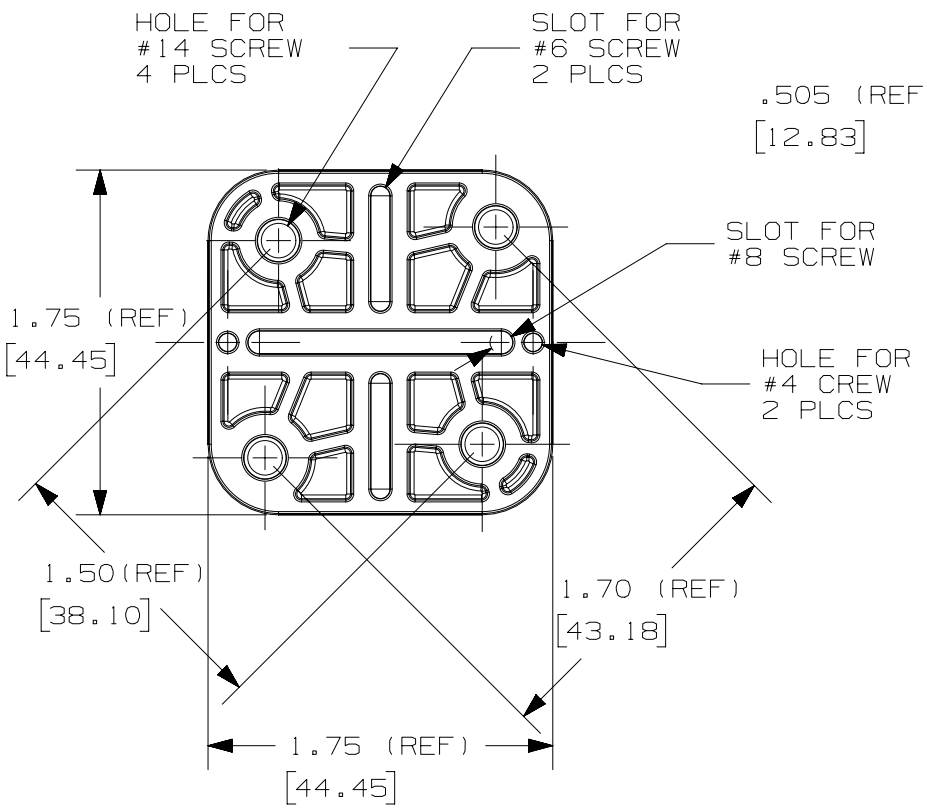

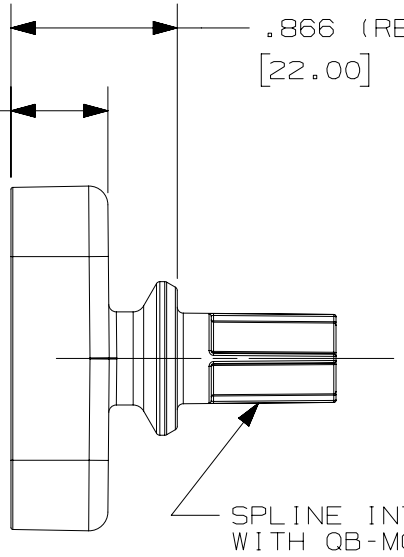

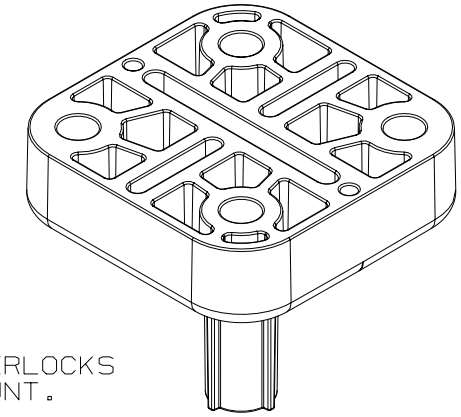

REV	DATE	BY	CHK	APR	DESCRIPTION	ECN
ANF	06-15-15	ANF	DJW	MSAD	DRAWING RELEASE	GAECN03010

TITLE

QUICK-BUILD MOUNTING BASE; 1.75" X 1.75"; ACCEPTS #4, #6, #8, AND #14 SCREWS; 25 PER PACKAGE
QB-BASE175-Q

CUSTOMER DRAWING

ITEM REVISION NAME: 14L203CK/05

DATASET FILE NAME: 14L203CK_CS/05A

UNLESS OTHERWISE SPECIFIED, DIMENSIONAL TOLERANCES ARE: IN [mm]
.X ± .1 [2.54] .XXX ± .005 [.127]
.XX ± .01 [.25] ANGLES ± 5 °
THIRD ANGLE PROJECTION

MATERIAL: NYLON

DRAWING NUMBER: 14L203CK-DC

DRAWN BY	DATE	CHK	SCALE	SHT 1 OF 1	SIZE
ANF	6/09/15	DJW	1:1		A